La Monferrina

MACCHINE AUTOMATICHE PER TUTTI I TIPI DI PASTA FRESCA
Via A. Vespucci, 38/40 - 14100 ASTI - (ITALY) - Tel. (0141) 273232 - Fax (0141) 275485

USER'S OPERATION AND MAINTENANCE MANUAL

SPARE PARTS FOR TECHNICAL ASSISTANCE

GB

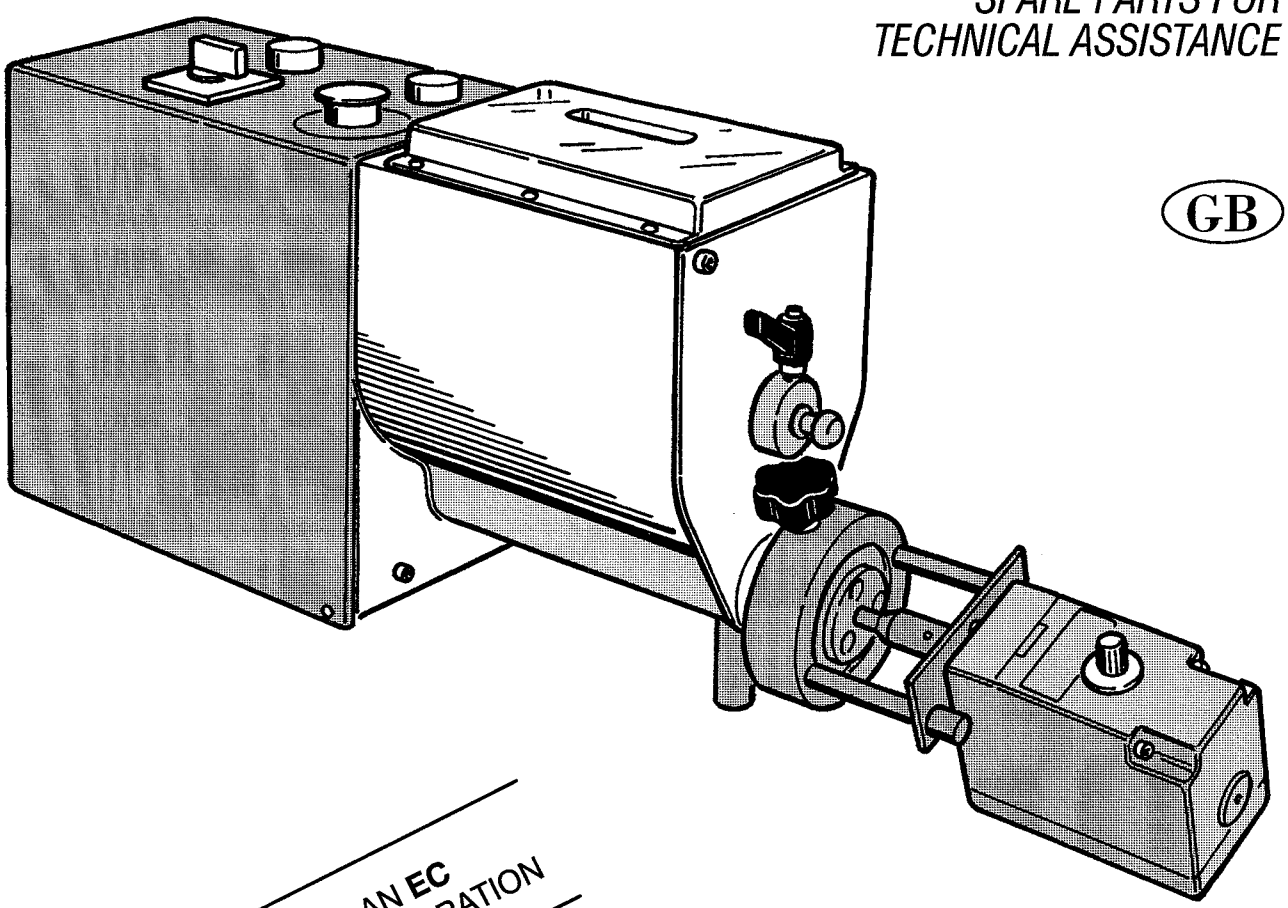

CONTAINS AN **EC** CONFORMITY DECLARATION

DOLLY

Automatic fresh pasta machine

E S S E D I
Manuali Tecnici

The subjects dealt with in this manual are those expressly required by the "EEC 89/392 Machine Directive" and subsequent modifications.

The technical information given was the information supplied by the manufacturer while the manual was being drafted.

Printed in Italy - September edition 1995

Preface

Thank you for choosing our fresh pasta producing machine. This model conforms with the general guidelines set forth in the "EEC MACHINE DIRECTIVE 89/392" and subsequent modifications.

To ensure proper operation and to obtain the best results possible, it is advisable to read this manual right through carefully before use.

The technical information in this manual is intended as a guide.
"La Monferrina" reserves the right to make modifications to the model described at any time, for commercial or technical reasons.

The Court of ASTI (ITALY) is the competent court for any dispute.

In the case of all communication with the manufacturer or re-seller, always quote the information on the machine's ID plate.

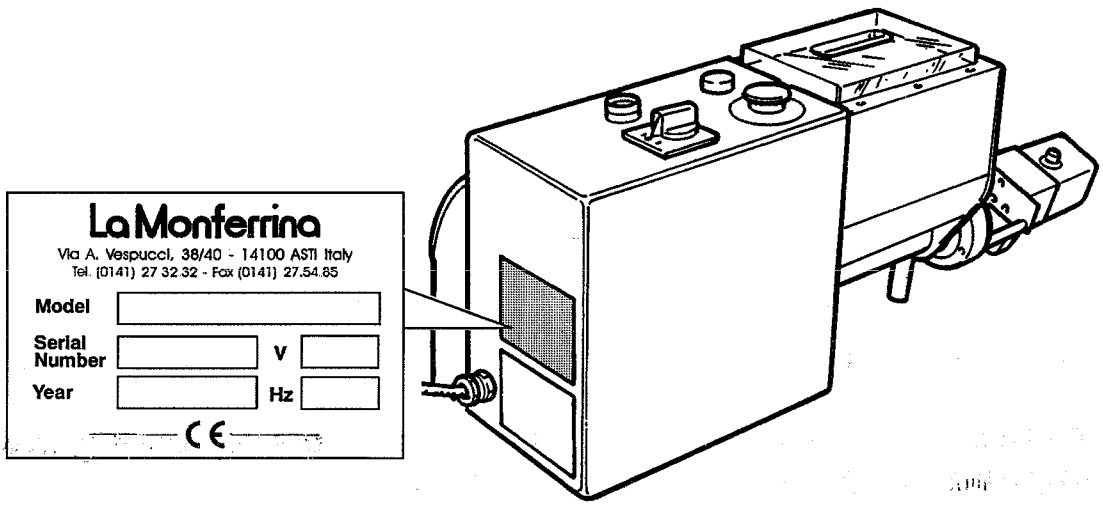

The manual must accompany the machine if it is resold.

CERTIFICATE OF CONFORMITY

The "**La Monferrina**" di A. Mascero & C. snc"

manufacturing company,

with offices in Asti (ITALY), Via A. Vespucci 38/40

declares under its own responsibility,

that the type of machine for the production of fresh pasta

described in this manual

Model

Serial N.

Year of manufacture

Voltage Hz

conforms with DIRECTIVES 89/392 CEE - 89/336 CEE

CE

First name:

Surname:

Position: ☐ Proprietor

☐ Legal representative

Asti,

Stamp and Signature

Guarantee

Conditions and limitations

"La Monferrina" guarantees this machine model for a period of twelve months.

The guarantee becomes null and void when the machine has been repaired by non-authorised personnel or when tools or accessories not supplied by, or recommended or approved by "La Monferrina" are used or if it seen that the serial number has been removed or altered during the guarantee period.

The guarantee runs from the purchase date and the card, duly completed in full, must be sent within ten days.
The purchase date is the one shown on the carriage note/invoice at the time when the machine is delivered by the re-seller.

"La Monferrina" under takes to repair or replace parts which show manufacturing faults during the guarantee period, free of charge.
Defects that are not clearly due to materials or manufacturing shall be examined at our "Centro di Assistenza Tecnica" (Technical Assistance Centre) or our works.
If the claim proves to be unjustified, all repair and/or part replacement costs shall be borne by the customer.

The guarantee certificate and the carriage note/invoice must be shown to the technical personnel carrying out repairs or must accompany the machine sent for repair.

The guarantee is not extended following technical work performed on the machine
Repairs are carried out at our "Centro di Assistenza Tecnica" (Technical Assistance Centre) at our works and the part/s involved must arrive with carriage paid (carriage expenses borne by the customer unless agreed differently).

The guarantee does not however cover: accidental damage, in transport, through negligence or inappropriate treatment, incorrect use not conforming with notes shown in the instruction booklet and anyway caused by phenomena not depending on the regular functioning or use of the machine.

The "La Monferrina" company declines all responsibility for any harm to persons or damage to property arising from bad or imperfect use of the machine.

For all and any dispute, the competent court is that of ASTI (ITALY).

Failure to send the guarantee coupon prevents "La Monferrina" from registering the guarantee and annuls the right to the guarantee itself.

Suggestions for pasta production

Any type of flour or durum flour or flour/durum flour mixture can be used for the dough.
The dough must be kneaded with eggs alone or an eggs/water mix.
The water can be replaced in part by finely-chopped spinach or vegetables to obtain green pastas or tomato puree to obtain red pastas or other ingredients: in these cases it is advisable to use hard grain durum flour.
For good dough, around 300-350 gr. of liquid is required for every kilogram of flour. This liquid may consist of eggs alone, just water or an egg/water mixture. Since the moistness of the flour varies according to type, climate and where it is stored, the amounts indicated must be adapted to the type of flour being worked by adding or decreasing the quantity of liquid slightly.
The dough is just right when, at the end of kneading, it is in the form of grains the size of coffee beans. If the dough coalesces into a even mass it means that too much liquid has been poured in. In this case, before extruding the dough, add a little more flour and let it mix for a bit longer. If, however, the dough does not form little balls but remains very floury, add a little more liquid.
Here below we give a few recipes for different types of dough. Remember that ingredients can at all times be modified and quantities changed according to your experience and taste.

Preparation for pastry for ravioli:

Fine flour 70%
hard grain durum flour 30%
5 eggs per kg. of dough + water
Knead for approximately 10 minutes
The moistness of the mixture between eggs and water must be around 32%.

Preparation of dough for tagliatelle:

Fine flour 70%
hard-grain durum flour 30%
5 eggs per kg. of dough + water

or:

hard-grain durum flour 100%
5 eggs per kg. of durum flour + water
knead for around 15 minutes with around 33% moisture.

Preparation of durum flour pasta
(e.g. rigatoni, fusilli, conchiglie, spaghetti etc.)

For this type of pasta only hard-grain durum flour with 30-33% water is used. When different types of flour are used it is a good idea to mix them well before adding liquid.
To take account of the consumer's taste, salt in the rough measure of 2 gr. per kg. of flour can be added to the dough, taking care to dilute it well in water.

Contents

1

Informative section

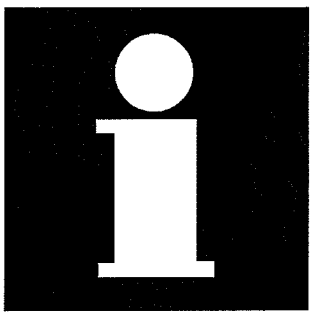

Information about the manual

This manual contains safety precautions and installation, operating and maintenance instructions as well as the section devoted to technical assistance containing the list of spare parts and wiring diagrams.
Some illustrations in this publication show parts and accessories that may be different from those on your machine. Guards and covers may have been removed to make the illustration clearer.
The ongoing uprating and enhancement of the product may have resulted in slight modifications to the machine that have not been included in this publication.
Read and study this manual and keep it somewhere you can get at it easily.
Whenever problems regarding the machine or this manual occur, consult the "La Monferrina" company and ask for the most recent information available.

- **Safety:**

The safety section lists all the possible basic precautions to guarantee operator safety. In addition, this section indicates the text and positioning of the warning labels used on the machine.
Read and learn the precautions listed in the safety section before operating with the machine or carrying out maintenance on it.

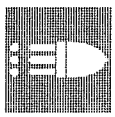

- **Installation:**

The installation section indicates machine component unpacking and assembly operations and all those operations to be performed before machine use. Instructions for fitting various standard and/optional accessories are also provided as are transportation instructions.

- **Operation:**

The operation section acts as a reference for the operator who does not know the machine and as revision for the expert.
This section shows the machine controls.
The illustrations guide the operator through the correct machine checking, start-up, operating and stopping procedures.
The operating techniques described in this publication are basic.
Skills and techniques develop as the operator becomes familiar with the machine and what it can do.

- **Maintenance:**

The maintenance section is a guide to taking care of the machine.
This section shows all the greasing and lubrication points on the machine. Instructions are also given regarding the periodic cleaning of the machine.

- **Spare parts and wiring diagrams** *(for the technical assistance)*

The spare parts section makes it possible, through the aid of exploded view drawings of the parts the machine comprises and lists, to identify the part in the machine to be replaced and its code for the purposes of ordering the new component.

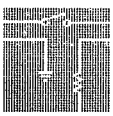

Electrical diagrams *(for the technical assistance, enclosed)*
The electrical diagrams section gives the machine's wiring diagrams
(with 220V single-phase motor and 380V three-phase motor) useful for the electrician.

Information about the machine

The machine has a pure, unalterable stainless-steel structure and conforms with current safety regulations in Italy and abroad.
The main components of the machine are:
- Single-phase 220 V or three-phase 380 V electric motor.
- Stainless steel tank and feeder.
- Stainless-steel shaft that can be removed to facilitate cleaning and maintenance.
- Plates for every type of dough.
- Automatic dough-cutter with speed variator and stainless-steel blade.

- **Uses provided for**
  This automatic machine has been designed, built and protected for the sole production of extruded dough made from raw materials such as hard- and soft-grain flour with the addition of water and/or eggs.

- **Noise**
  With reference to Italian noise legislation (decree 277), the machine has been designed and built to reduce noise to the minimum and therefore generates a level of continuous acoustic pressure of less than 70dB.

- **Environmental values**
  The machine works properly within the following environmental parameters:
  Temperature between +20° and + 30°
  Humidity between 40% and 50%.

- **Scrapping**
  If the machine is to be scrapped, it must be disposed of at suitably-equipped dumps in compliance with current legislation.
  The machine's frame is made of steel (AC) and polycarbonate (PC).
  The electric motor is made of aluminium (AL), steel (AC), copper (CU) and polyamide (PA).
  Recover the used reduction gear oil and dispose of it at specially-equipped collection centres.

The plates for producing different types of pasta can be of two types. With the first, bronze, type, the dough produced has a more wrinkled and matt-type surface.
With the second, Teflon, type the dough obtained has a smoother and shinier surface. The Teflon plates are more delicate than the bronze ones and allow a slightly higher hourly dough output.
"La Monferrina will guarantee the supply of spare parts for this machine for five years following any discontinuation in the manufacture of this model".

CAUTION

THE CUSTOMER IS RESPONSIBLE FOR ENSURING THAT THE MACHINE HAS NOT BEEN DAMAGED STRUCTURALLY IN A WAY THAT COULD PREJUDICE ITS OPERATION AND/OR SAFETY, DURING TRANSPORT.

Accessories supplied

- 4 dough plates
(the type of plate is chosen by the customer when the order is placed).

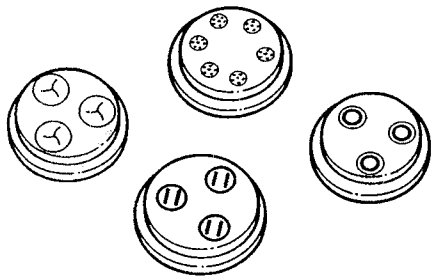

- 1 Spanner for the plate supporting ring nut

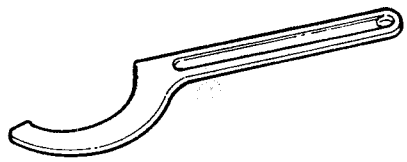

Optional accessories

- 1 dough-cutter motor

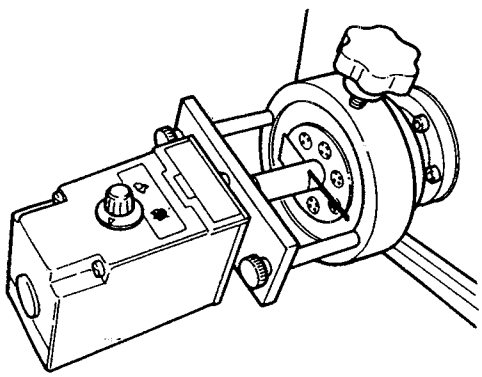

- 2 blades for the dough-cutter motor

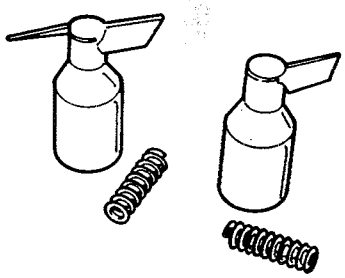

Technical specifications

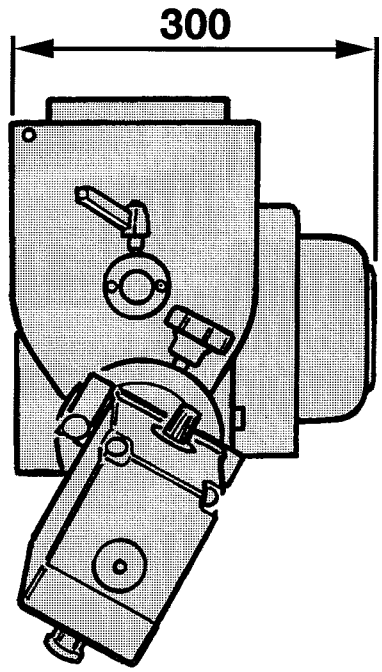

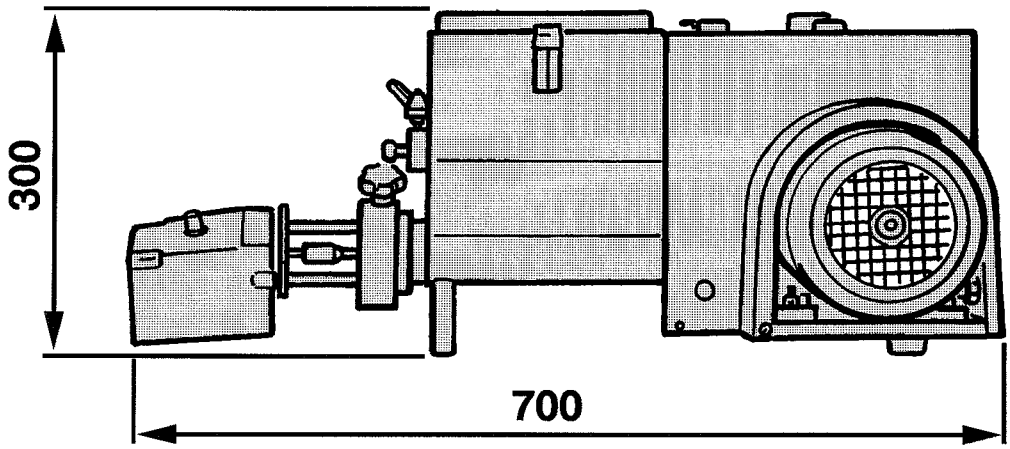

Mixing tank capacity	Kg 2
Dough production	Kg/h 6 ÷ 8
Three-phase or single-phase motor	Hp 0,75
Weight	Kg 27

Component identification

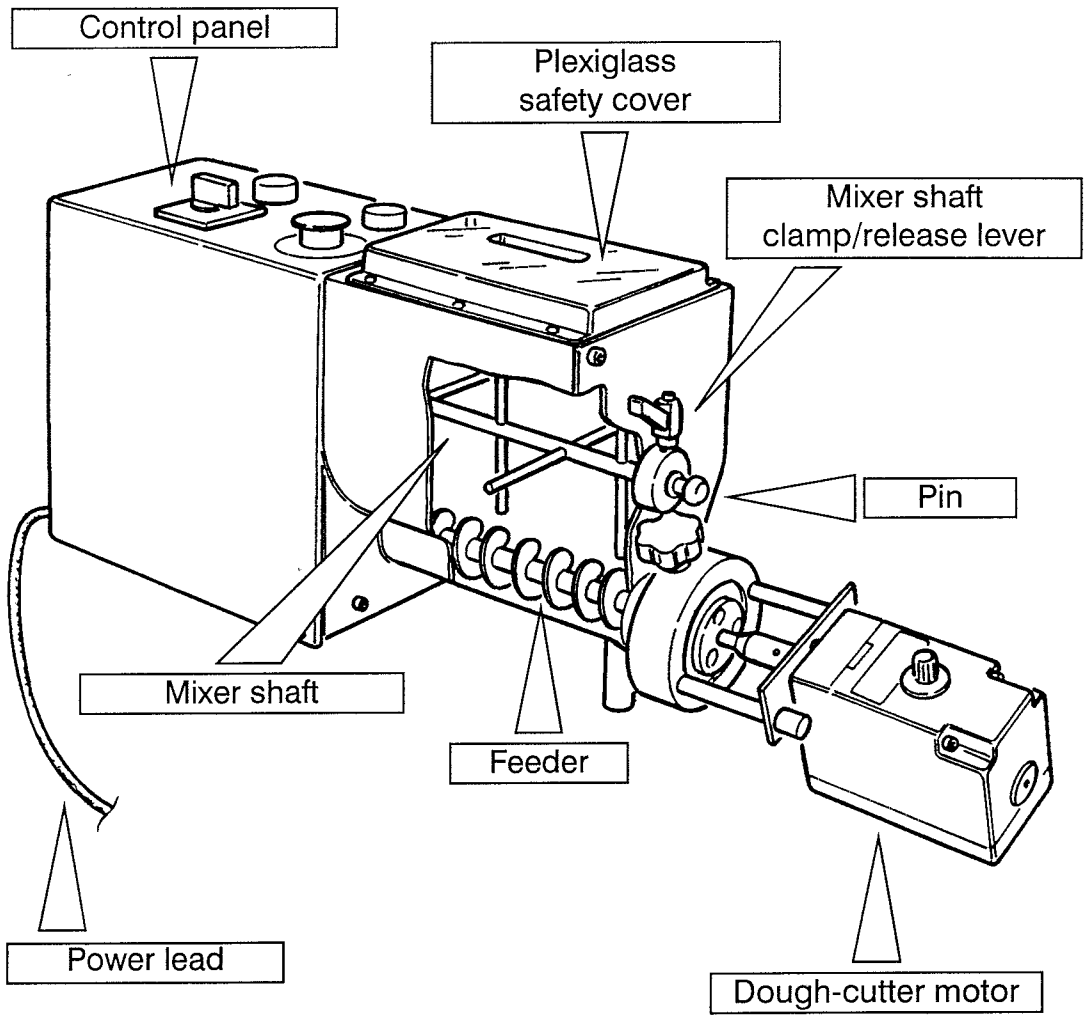

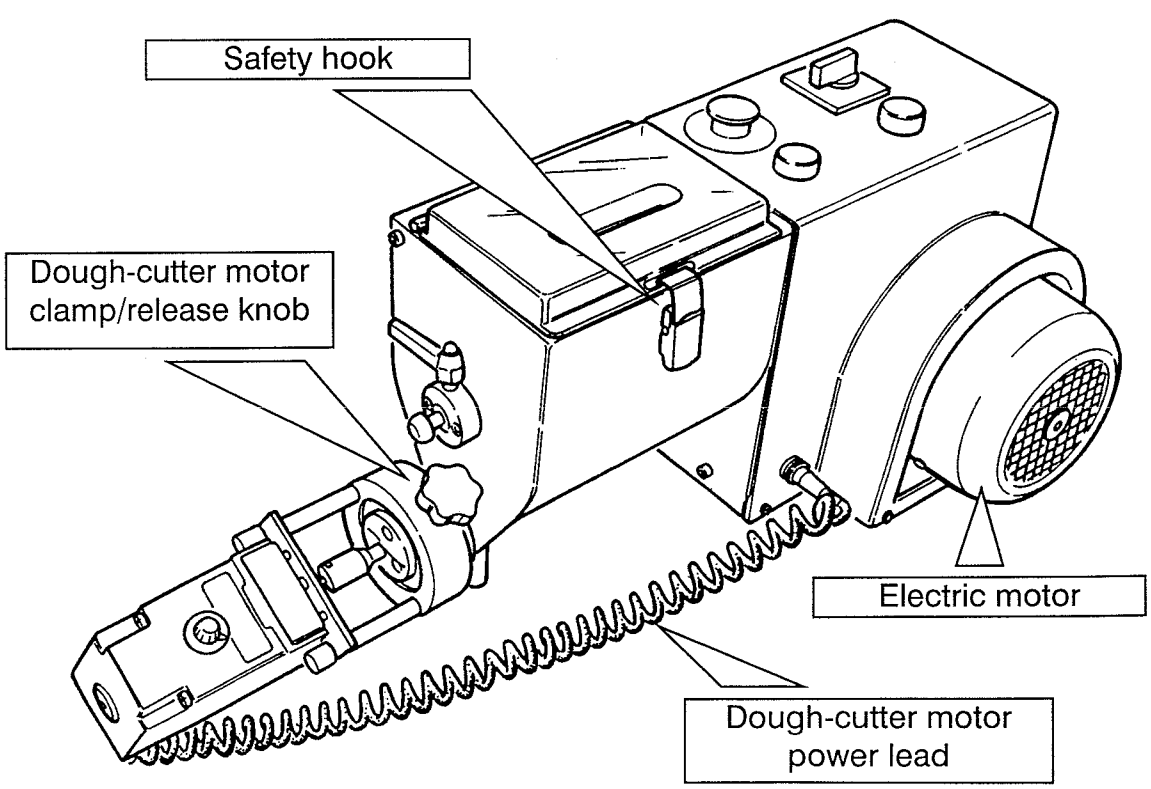

2

Safety Section

Important safety information

Failure to comply with basic safety regulations or precautions could cause accidents during machine operation, maintenance and repair. An accident can often be avoided by recognising potentially hazardous situations before they arise. The operator must be alert to potential hazards and be suitably trained, skilled and have the right tools for carrying out these tasks properly.

The improper use of the machine during operation or maintenance can be dangerous and cause serious accidents.

Do not run or carry out maintenance on the machine until the instructions have been read and understood.

Safety precautions and warnings are given in this manual and are indicated on the machine itself. If the operator does not heed these danger warnings, he/she could have an accident with serious consequences for both himself/herself and others.

CAUTION

CAUTION messages are displayed before procedures that, if not complied with, could result in injury to the operator.

WARNING

WARNING messages are displayed before procedures that, if not complied with, could result in damage to the machine.

"La Monferrina" is not in a position to foresee all possible circumstances involving a potential hazards.
The warnings in this manual and on the machine are therefore not exhaustive. Where tools, procedures working methods or techniques not expressly recommended by the "La Monferrina" company are used, it will be necessary to make sure there is no risk of personal injury or injury to other people involved.

The information, specifications and the illustrations in this publication are based on information available when it was prepared. The specifications, regulations, illustrations and other items may change at any time and the changes made may affect the maintenance to be carried out.

General instructions

- Carefully read this manual before starting up and/or operating the machine.
  If there is any doubt over any instruction, contact the re-seller or manufacturer.
- If this manual is damaged or lost, the re-seller must be asked for another copy.
- Structural damage, modifications, alterations, or repairs not carried out properly could alter this structure's protective capacity and thereby annul this certification.
  Modifications must only be made by "La Monferrina" -authorised technicians.
- Do not wear loose clothing or protruding objects that could get caught in the machine.
- Keep the machine clean and free of extraneous material such as debris, oil, equipment or other objects that could damage functioning and injure the operator.
- Before carrying out cleaning or maintenance operations, remove the plug.
- Do not use the machine in areas with an explosive atmosphere.
- Handle the blades supplied for the dough-cutter motor with care.
- The machine must only be run by a single worker who must position himself/herself in front of the control panel.
- Never the leave the machine idle with the plate mounted and/or dough in the tank.
  The operator is responsible for paying due care and attention.

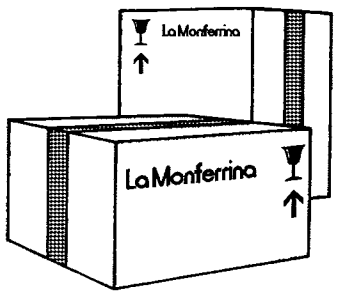

Use genuine "La Monferrina" spare parts

La Monferrina

"La Monferrina" declines all liability for the use of non-genuine spare parts.

Spare parts may only be fitted by "La Monferrina" technicians or by the technicians they authorise.

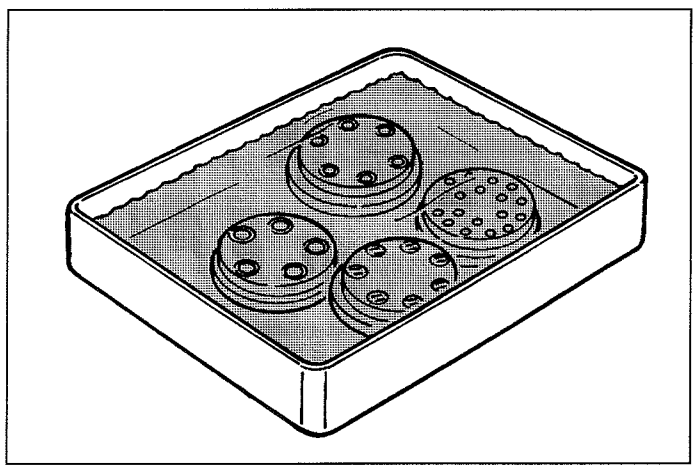

All the plates must be immersed in a container filled with water after use. The water should be changed at least twice daily.

WARNING

Never fit a plate to the machine if the plate has been left out of the water.

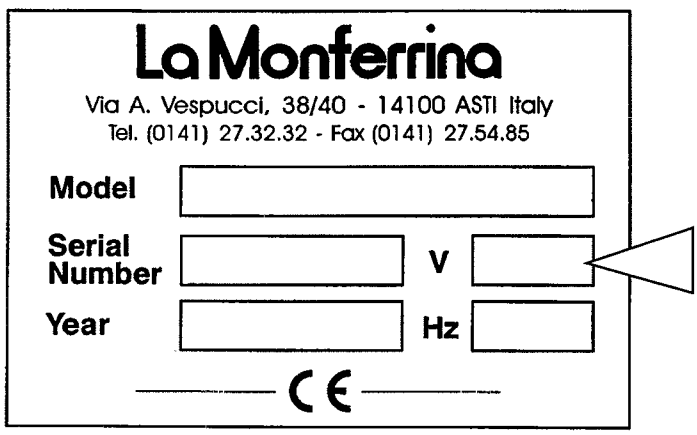

Make sure the voltage at the mains socket is the same as the voltage indicated on the machine's ID plate.

Safety plates and symbols

There are a number of stickers on the machine bearing symbols and/or safety messages.
Their exact position and the nature of the related hazard are described in this section.

CAUTION

Make sure that all the safety symbols can be clearly read. Clean them with a cloth, soap and water. Do not use solvents, diesel or petrol.
Replace damaged, missing or hard-to-read labels obtaining new ones from the "La Monferrina" re-seller. If a label is on a part to be replaced, make sure the new piece has a new label attached to it.

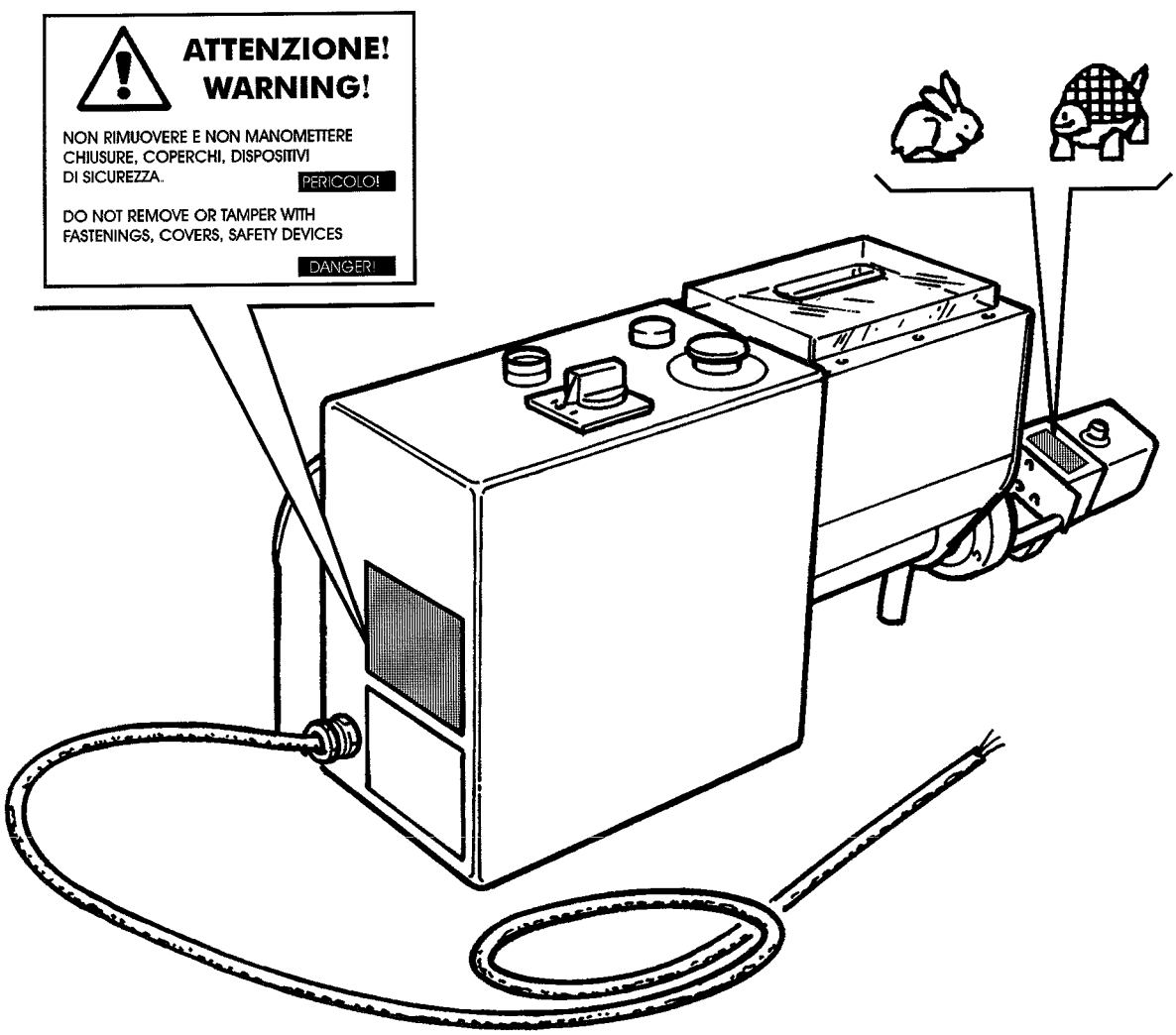

3

Installation section

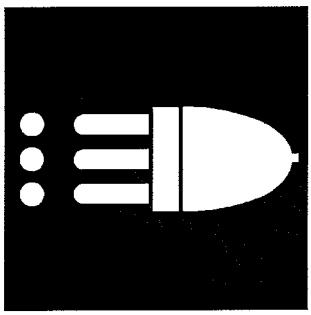

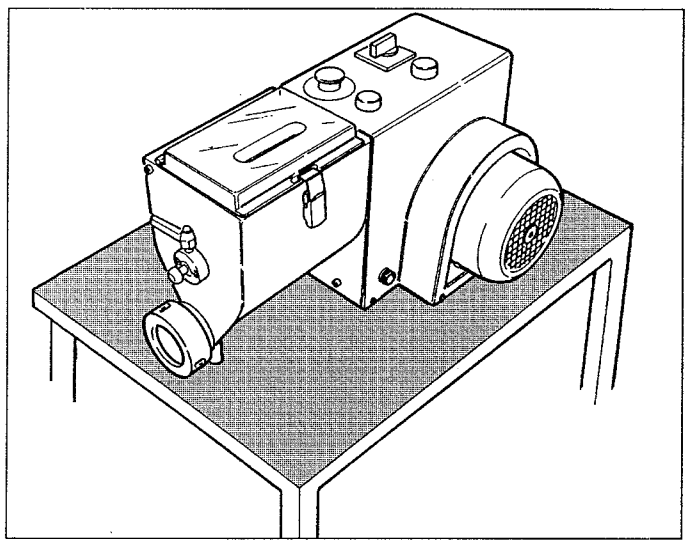

Position the machine on a perfectly level table.

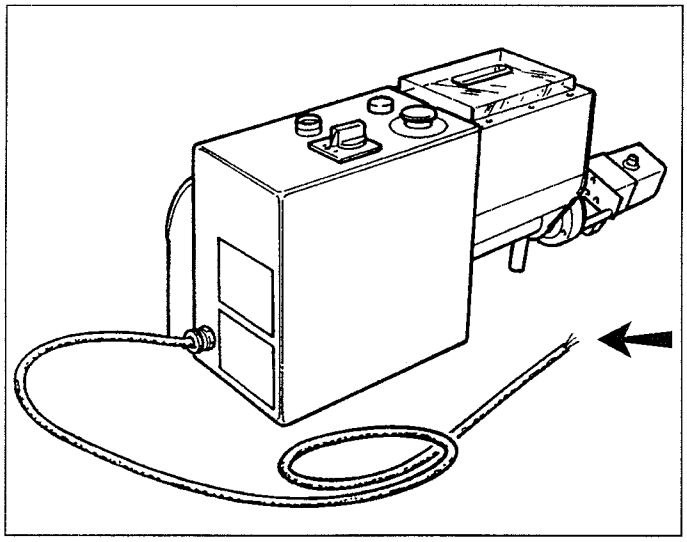

The machine is not supplied with a plug for connection to the mains socket, an electrician must therefore fit a suitable plug.

CAUTION

"La Monferrina" declines all liability for incorrect connections or the use of a plug that is not suitable for the machine.

Unscrew the plate support ring nut.

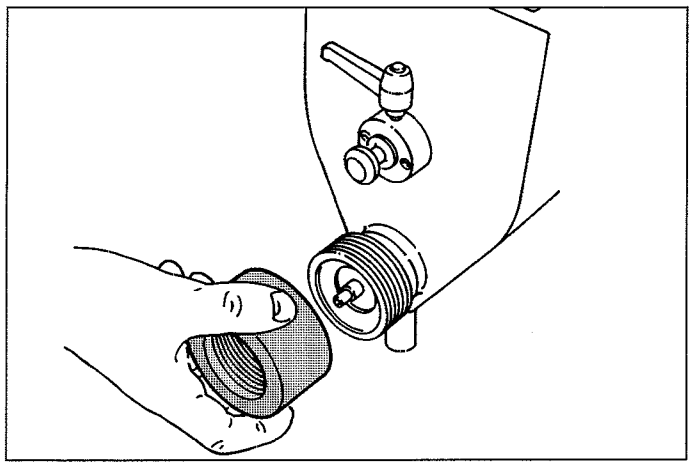

Insert the plate required into the ring nut and screw the ring nut with plate onto the machine again.

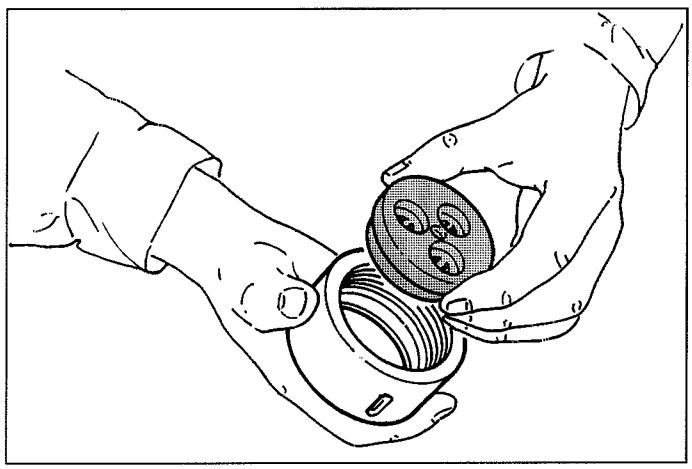

If you wish to produce short pasta, choose the suitable dough-cutting blade from the three supplied. Insert the spring supplied into the blade and fit it onto the pin on the dough-cutter motor (optional).

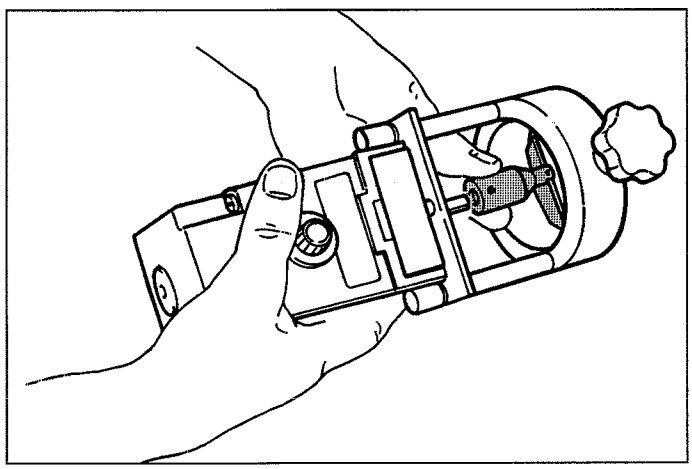

CAUTION

Handle the dough-cutting blades carefully.

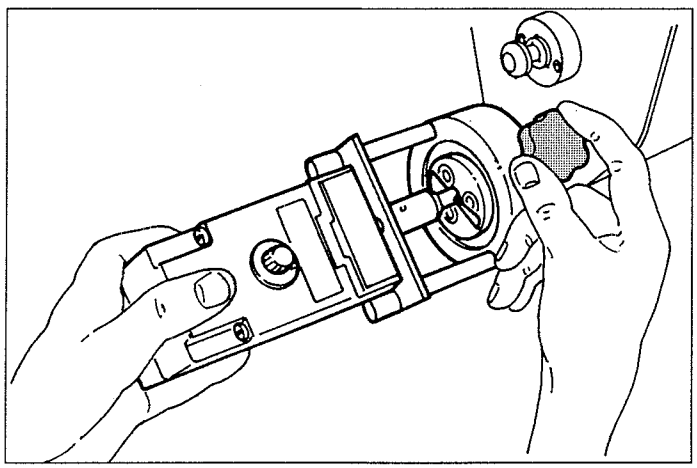

Fit the dough-cutter motor onto the machine by fixing it with the knob shown in the figure.

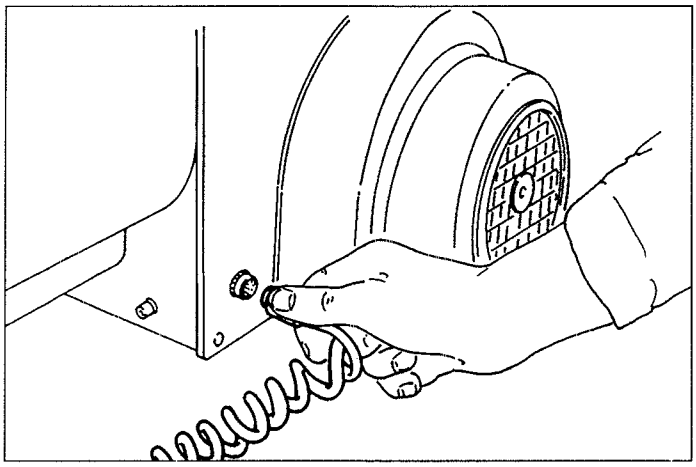

Insert the dough-cutter motor power supply jack into the socket on the machine.

CAUTION

Before starting the machine, make sure the voltage specified on the ID plate corresponds to the mains voltage.

Correct connection check (380 V three-phase)

Check that the knob ❶ of the selector switch is at "0"
Start up the machine by turning selector switch knob ❶ to the left to the KNEAD position

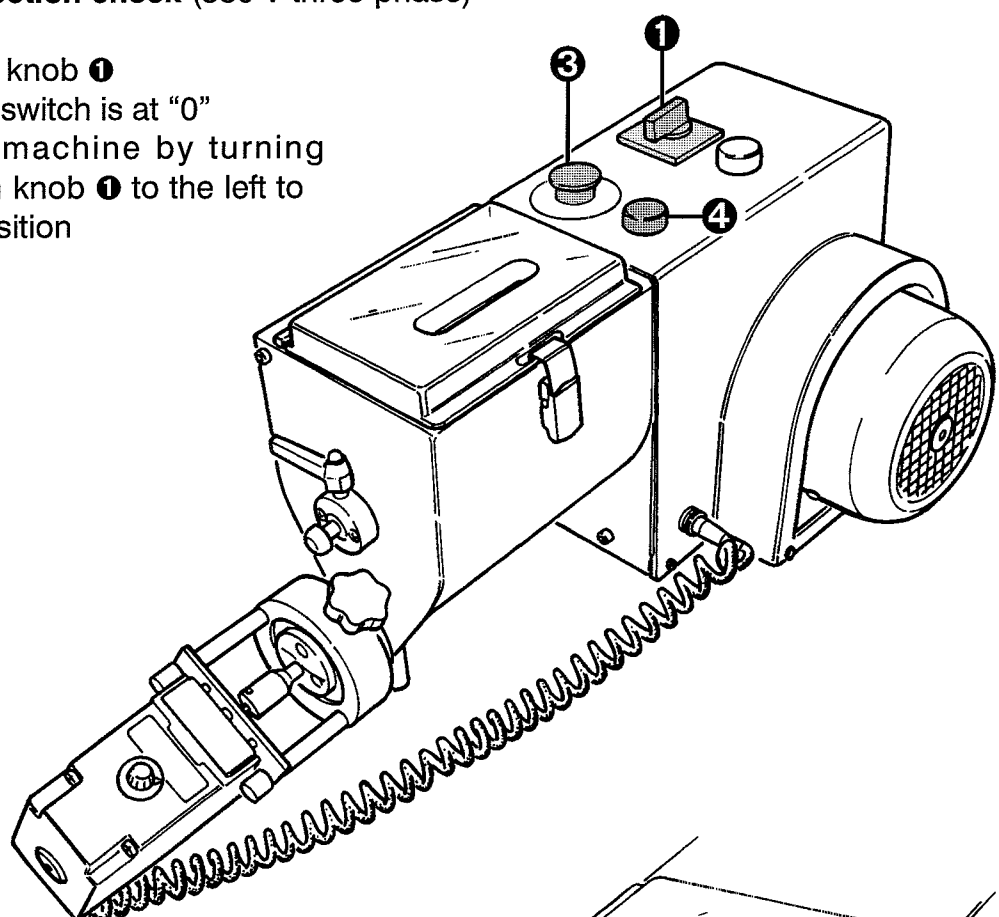

When "START" button ❹ is pressed, the mixer shaft (that can be seen through the upper plexiglass cover) must turn in an anticlockwise direction as shown in the figure.

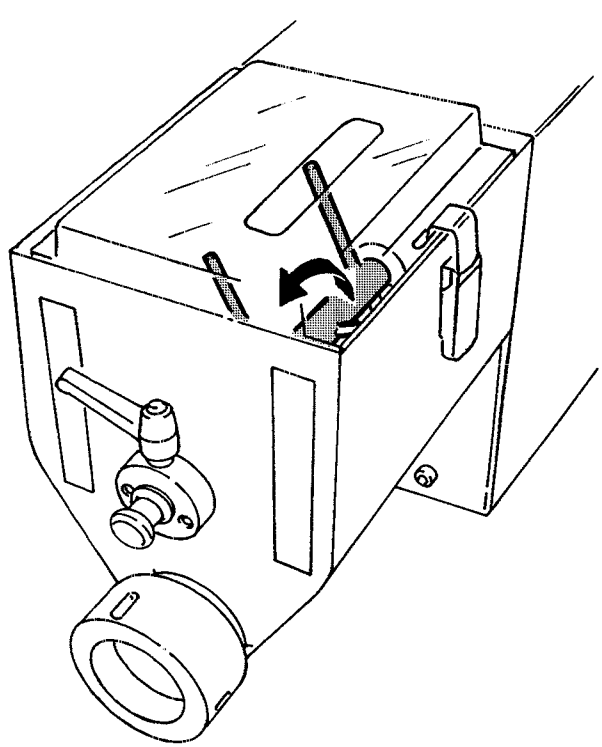

WARNING

If the mixer shaft is turning in the opposite direction, press the STOP/EMERGENCY button ❸ immediately to stop the machine.

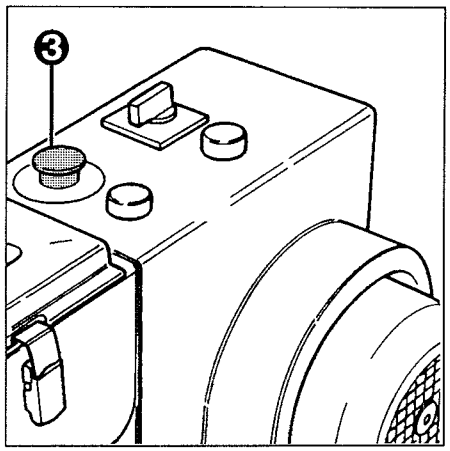

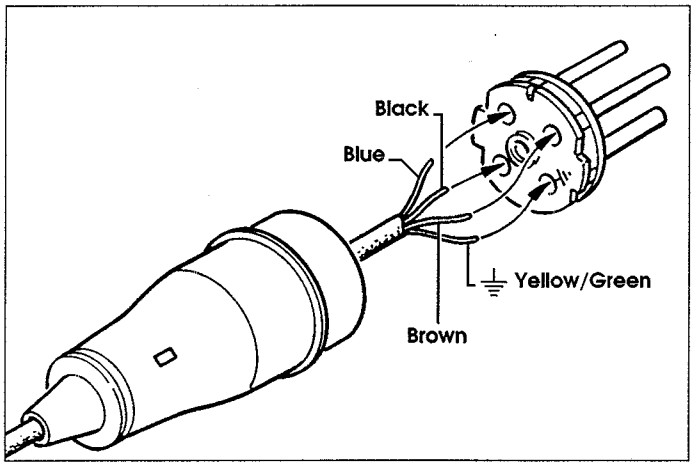

Remove the power supply plug from the socket and swap the position of the brown and black wires as shown in the figure
The yellow-green ground wire must never be moved.
You are recommended to get an electrician to perform this operation.

4

Operation section

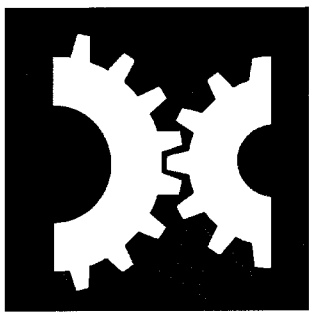

Description of the controls

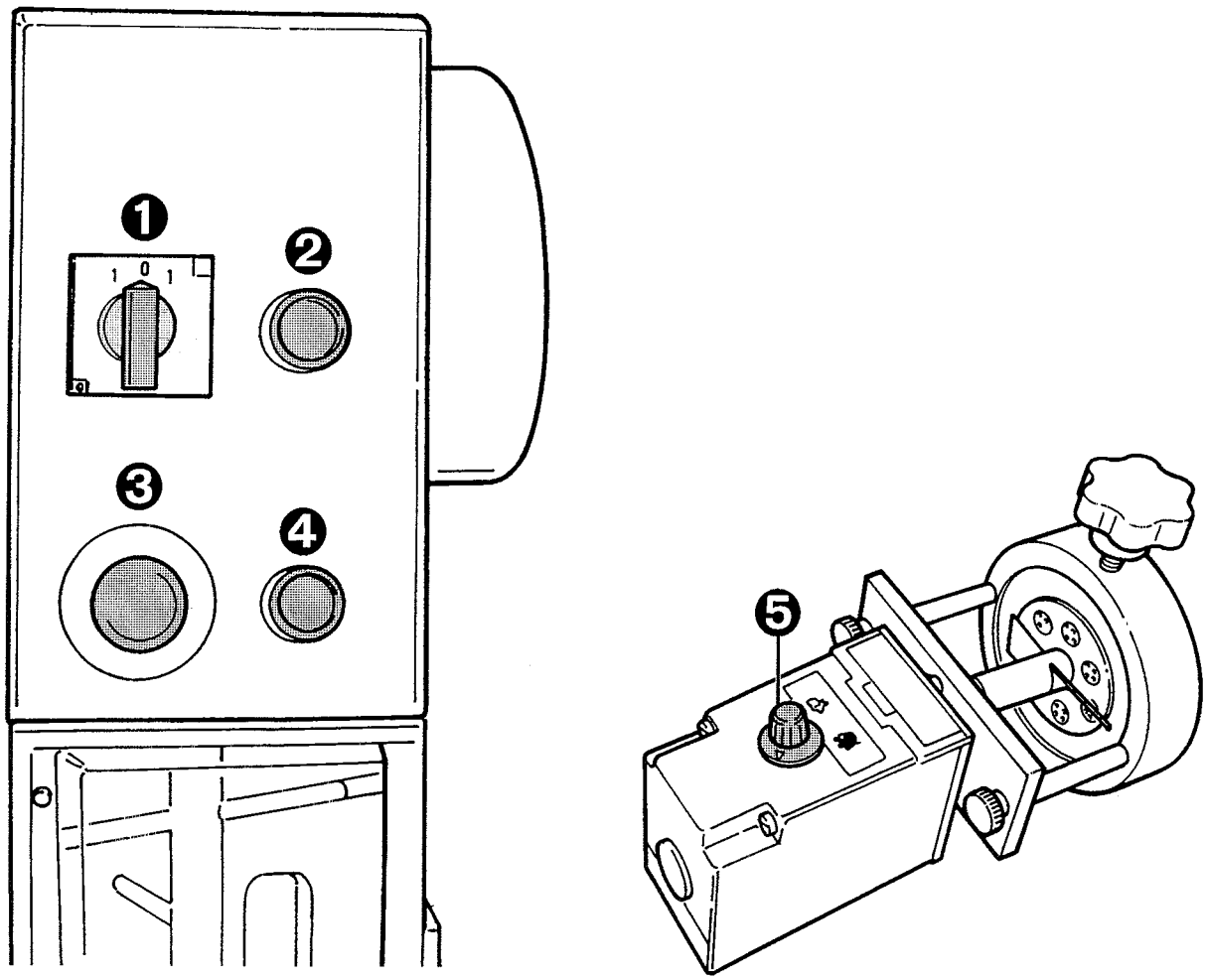

❶ ON/OFF / Operating direction reversal switch

❷ Green power on indicator lamp.

❸ STOP button

❹ START button

❺ Dough-cutter motor regulation speed control knob

Work cycle

- **Before the cycle:**

- Check the selector switch ❶ on the control panel is at zero (0).
- Make sure you have complied with all the precautions described in the Safety section.

- **Ciclo di lavoro:**

- Open the cover and fill the mixing tank with the basic ingredients (flour and/or hard-grain durum flour), water and/or eggs.
  You are recommended always to weigh the flour and/or hard-grain durum flour poured into the tank to be able to determine the precise quantity of liquid (water and/or eggs) to be added.
  Break the eggs into a separate vessel thereby preventing any shell falling into the tank and clogging up the plate.
  You are also recommended to beat the eggs well so the yokes blend well with the whites.

Note:

Read the pasta production recommendations at the beginning of the manual

Close the transparent plexiglass cover and secure it with the relevant safety catch.

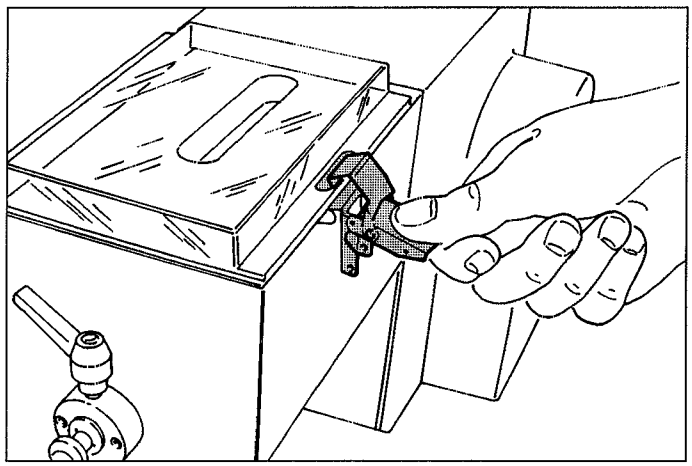

CAUTION

Under no circumstances may you remove the transparent cover and/or tamper with the safety microswitch.

- Turn the selector knob ❶ to the left and position it on "KNEAD" 3.
- Press the start button ❹.

WARNING

Under no circumstances let the machine run with the selector switch ❶ turned to the "EXTRUDE" position before kneading the flour. This could cause serious mechanical damage.

- The friable dough broken up into granules will be ready to be extruded after around 15 minutes.

CAUTION

Do not wear loose garments or protruding elements that could get caught up in the machine.

To produce long pasta (tagliatelle, spaghetti etc.):
- Turn the selector knob ❶ to the right from the previous "KNEAD" position to the "EXTRUDE" position.
- Press the "start" button ❹.
- Begin to cut the dough coming from the plate with a spatula or blade.

To produce short pasta:
- Fit the dough-cutter motor, with a blade selected for the length of the cut, onto the plate and secure it by tightening the safety knob.
- Turn the selector knob ❶ to the right from the previous "KNEAD" position to the "EXTRUDE" position.
- Press the start button ❹.
- Turn knob ❺ to regulate the dough-cutter blade rotation speed.

Changing the plate

To change the pasta type it is necessary to change the plate in the following way:

- Press the STOP button ❸ thus stopping the machine.
- Return the selector knob ❶ to (0).
- Unscrew the knob and remove the dough-cutter motor.

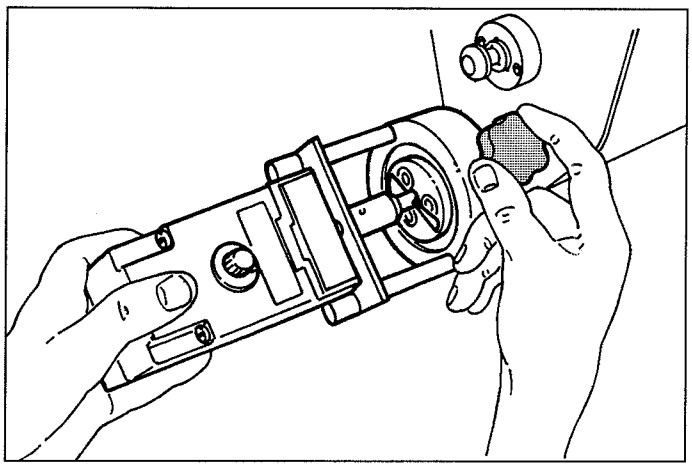

- Turn the selector knob ❶ to the right, to the "KNEAD" position.
- Press the START button ❹ and let the machine run for some 10 seconds, reducing the pressure inside the plate.
- Stop the machine by pressing the STOP button ❸.

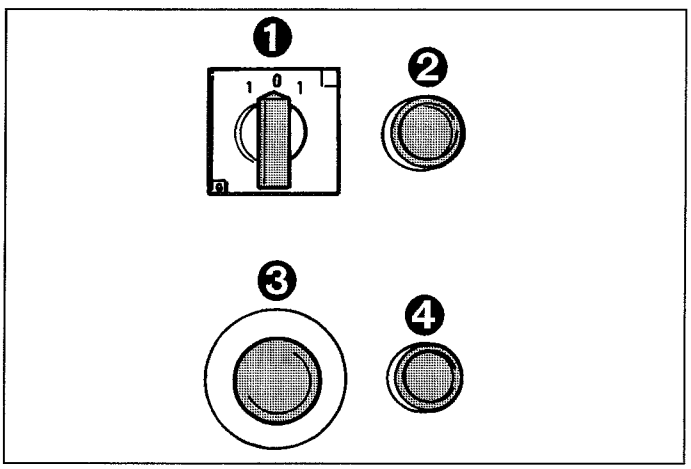

- Loosen the ring nut with the special spanner supplied.

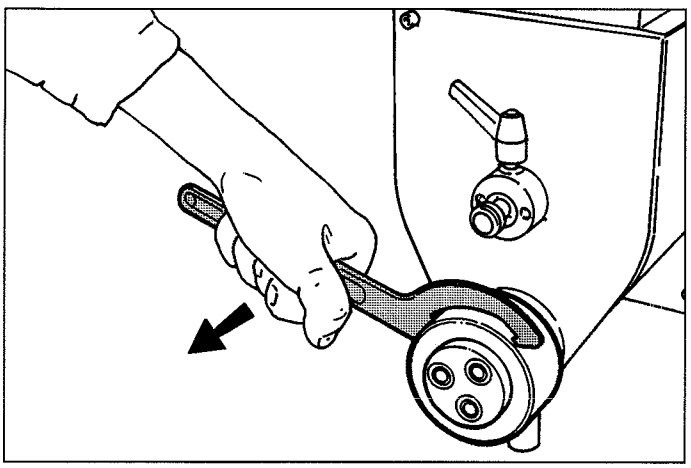

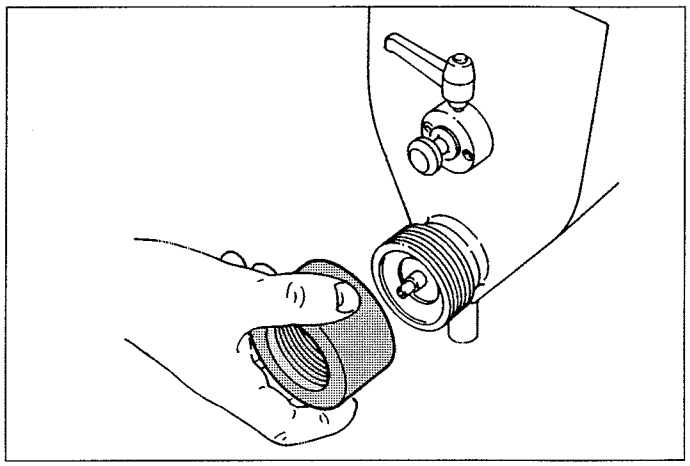

Unscrew and remove the ring nut.

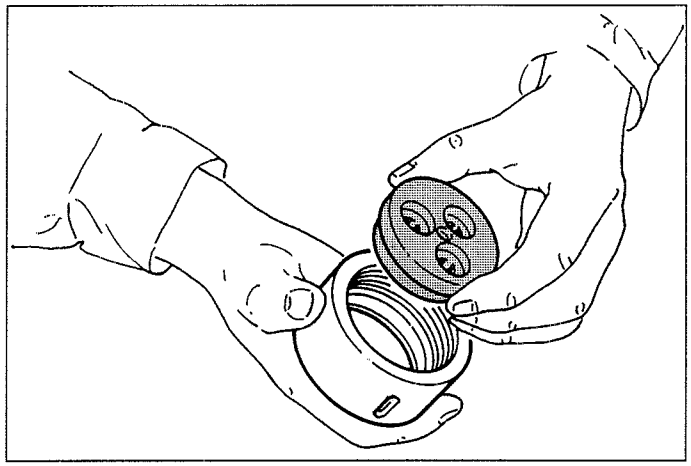

Remove the plate and replace it with another.

WARNING

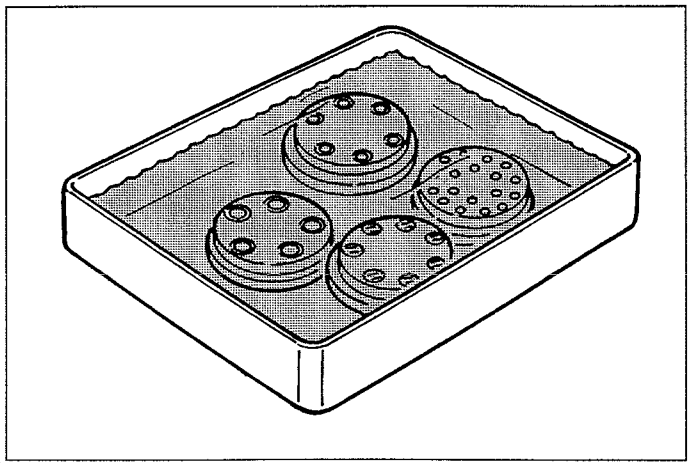

After use, the plates must always be immersed in a container full of water to prevent the dough from drying.

5

Maintenance Section

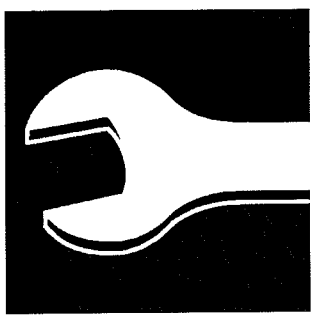

CAUTION

Before cleaning the machine, remove the plug from the socket. Never start up the machine while carrying out maintenance such as cleaning, greasing or lubricating it.

To make it easier to clean inside the mixing tank, the shaft should be removed in the following way:

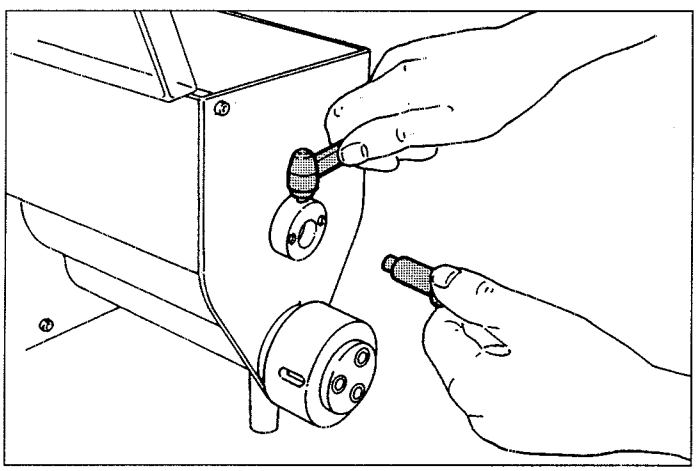

Turn the locking lever in an anti-clockwise direction and remove the fixing pin.

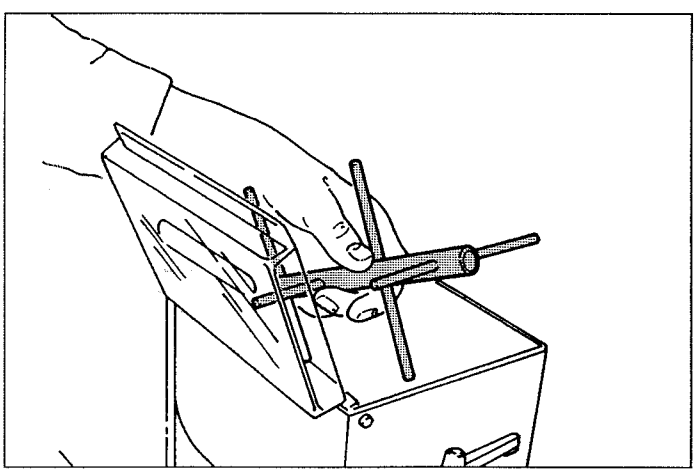

Pull the mixer shaft out from above.

Clean inside the tank and the shaft that has been removed, with a damp sponge.

Refit the shaft with its ring nut and tighten the locking lever again.

Use the spanner supplied to loosen the plate support ring nut.

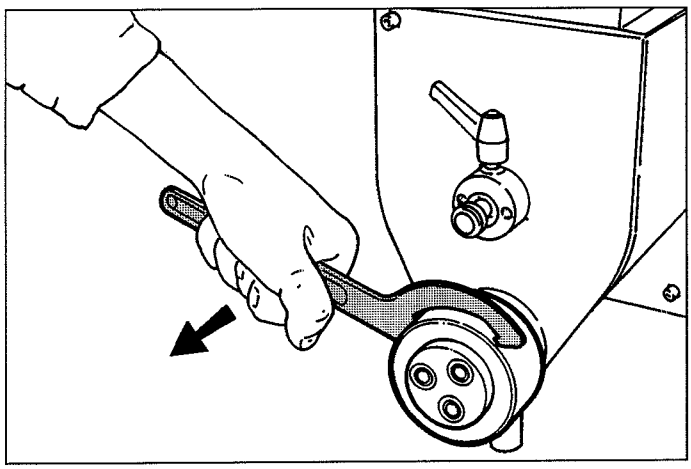

Unscrew the ring nut and remove it. Remove the feeder and clean it with a damp sponge.

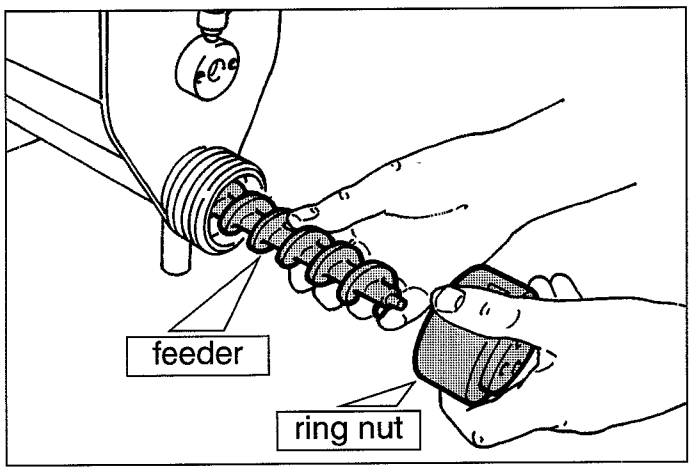

Remove the plate from the ring nut and plunge it into a container full of water.
The dough inside the plate holes must never be allowed to dry.
Refit the feeder and the plate support ring nut.

WARNING

Do not use jets of water to clean the machine!
Never fit a plate left out of the water!

6

Spare Parts Section

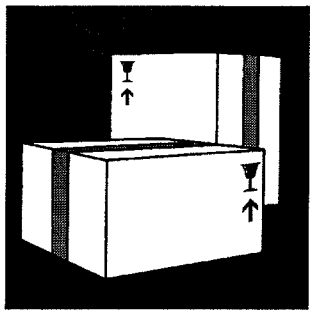

For technical assistance

The spare parts described in this section must be fitted by technicians authorised by "La Monferrina".

Contact "La Monferrina"
Tel. (0141) 273232
for the names of the authorised maintenance technicians in your area.

To order the spare parts photocopy the attached sheet and send it, fully completed by typewriter to:

La Monferrina s.n.c.
Ufficio Tecnico Ricambi
Fax 0141 /27 54 85

La Monferrina snc

Tel. (0141) 273232 - Fax (0141) 275485

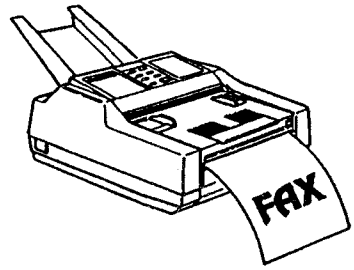

Date .....

Please attention: .....

Spare parts order form

Company

Sent by:

Town/City

Country

Address

☎

Machine model

Serial number

Delivery date

Your reference

Destination of the material

Plate n°	Code number	Description	No.	Notes

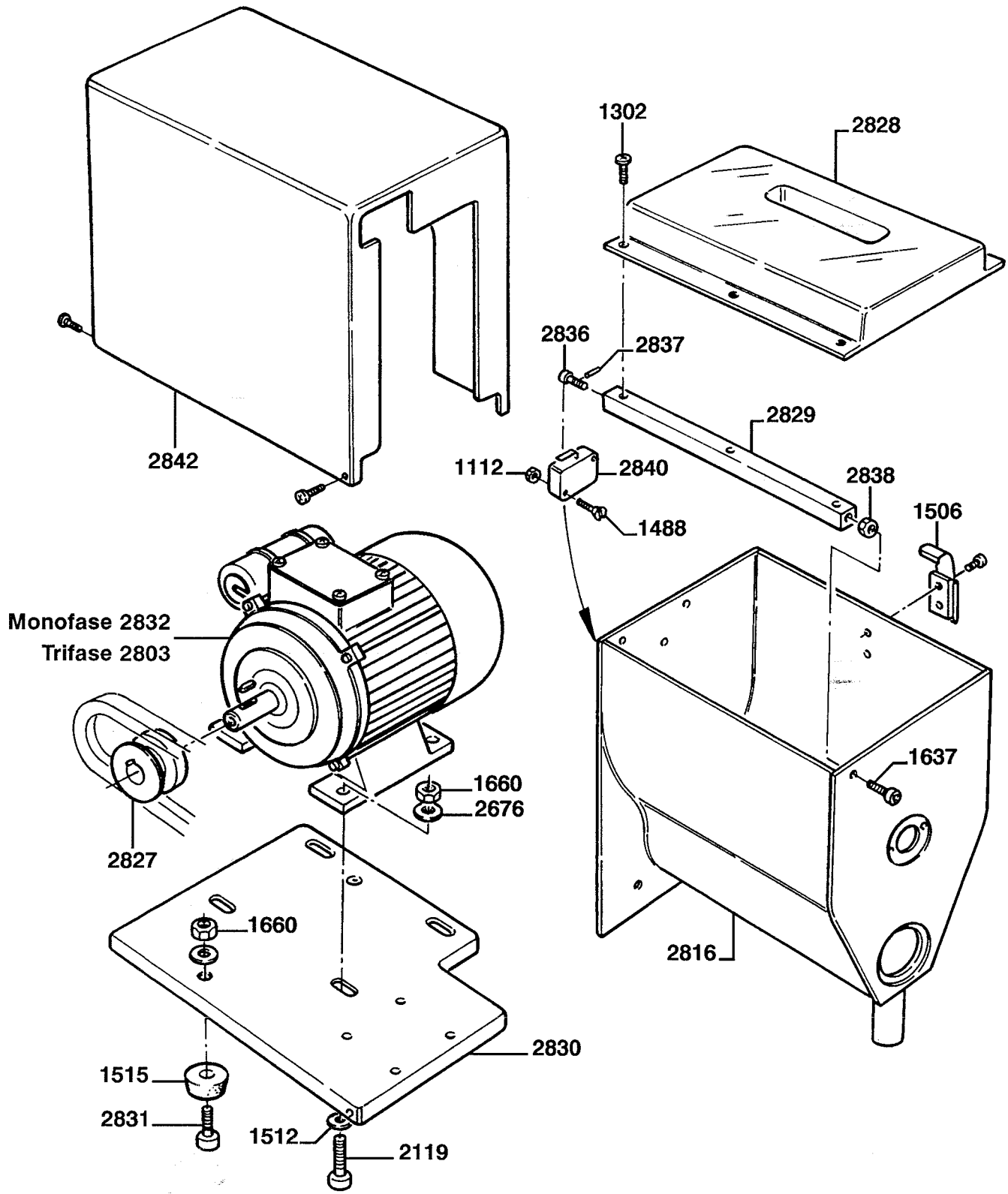
1302
2828
2836
2837
2829
2842
1112
2840
2838
1488
1506
Monofase 2832
Trifase 2803
1637
1660
2676
2827
1660
2816
2830
1515
2831
1512
2119

Code	Description
1112	Hexagonal nut
1488	Screw
1506	Quick closure
1512	Flat washer
1515	Foot
1637	Screw
1660	Nut
2119	Screw
2676	Plain washer
2803	Three-phase electric motor
2816	Tank
2827	Motor pulley
2828	Tank cover
2829	Hinge
2830	Base
2831	Screw
2832	Single-phase electric motor
2836	Micro control screw
2837	Flexible pin
2838	Hexagonal nut
2840	Microswitch
2842	CASING

Code	Description

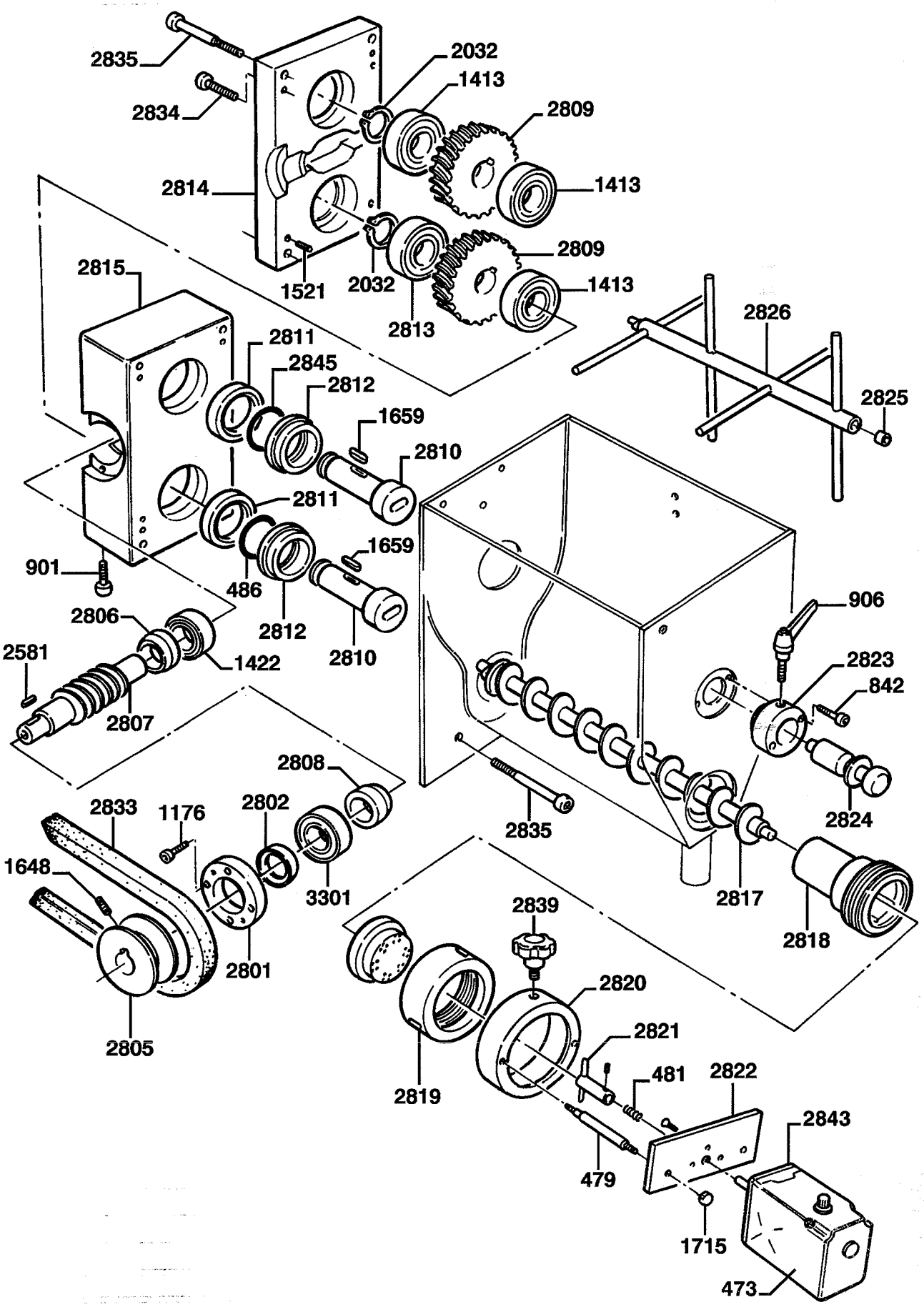
2835
2834
2032
1413
2809
2814
1413
2809
1521
2032
1413
2813
2815
2826
2811
2845
2812
2825
1659
2810
2811
1659
901
486
2812
2810
906
2806
2581
1422
2823
842
2807
2808
2833
1176
2802
2835
2824
1648
3301
2817
2839
2818
2801
2820
2821
2805
481
2822
2819
2843
479
1715
473

Code	Description
473	Dough-cutter motor hood
479	Small column
481	Spring
842	Flange
901	Screw
906	Snap handle
1176	Screw
1413	Bearing
1422	Bearing
1521	Cylindrical pin
1648	Dowel pin
1659	Tang
1715	Hexagonal nut
2032	Seeger
2581	Tang
2801	Flange
2802	Shaft seal
2805	Driven pulley
2806	Spacer bar
2807	Screw
2808	Spacer bar
2809	Toothed wheel
2810	Reducer shaft
2811	Shaft seal
2812	Ring
2813	Bearing
2814	Cover
2815	Reduction unit body
2817	Feeder
2818	Threaded bushing
2819	Ring nut
2820	Support ring
2821	Dough-cutting blade
2822	Cross-piece
2823	Flange
2824	Pin
2825	Bush
2826	Mixer shaft
2833	Trapezoidal chain
2834	Screw
2835	Screw
2839	Knob
2843	Dough-cutter motor
2845	O-ring
3301	Bearing

Code	Description

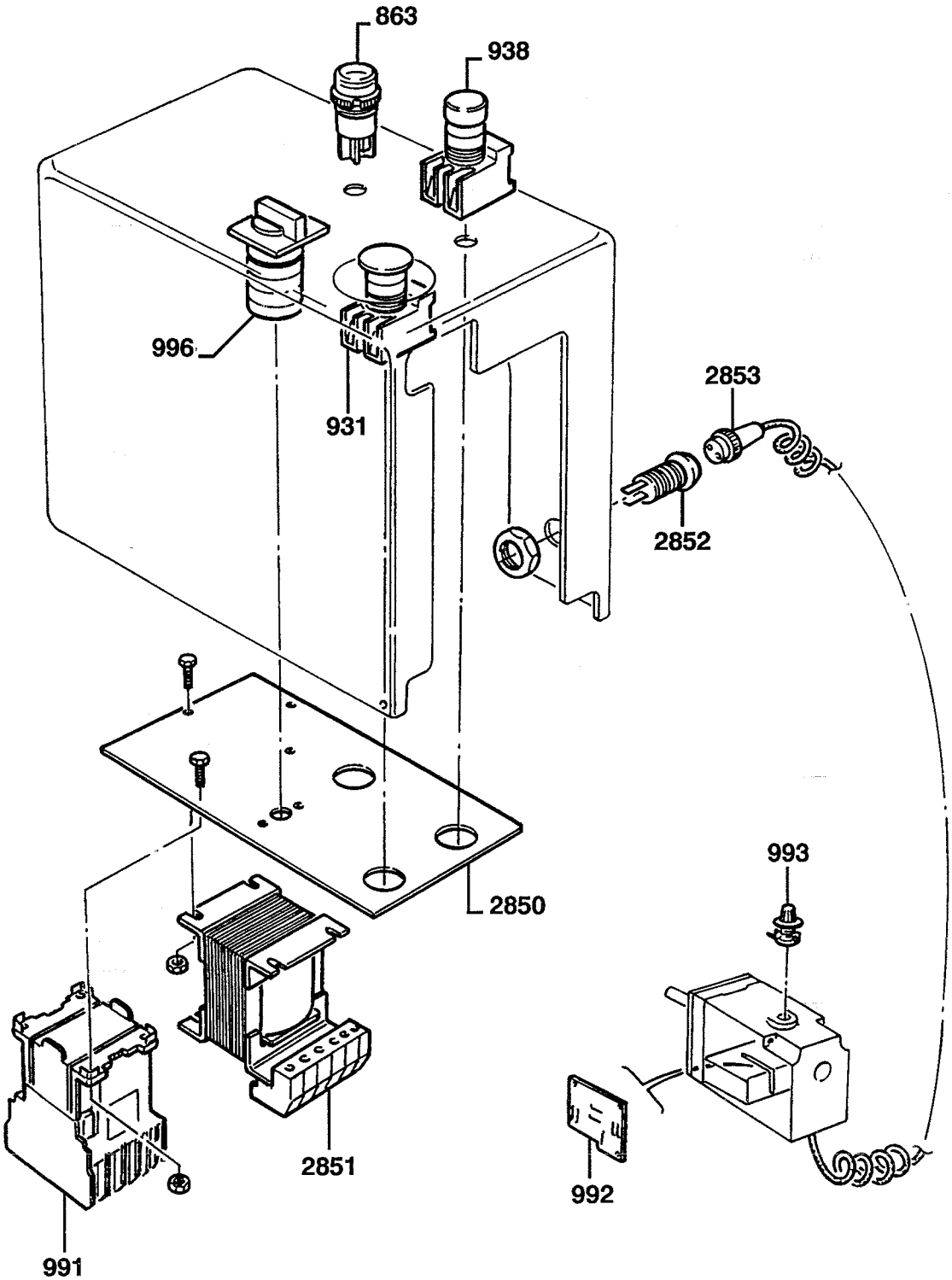
863
938
996
931
2853
2852
2850
993
992
2851
991

Code	Description
863	Luminous indicator light
931	Stop button
938	Start button
991	Contactor
992	Electric card
993	Potentiometer
996	Reversing gear
2850	Board
2851	Transformer
2852	Socket
2853	Plug

Code	Description

7

Wiring diagram section

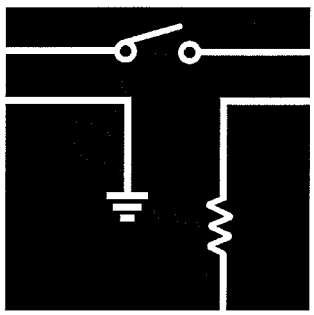

For technical assistance

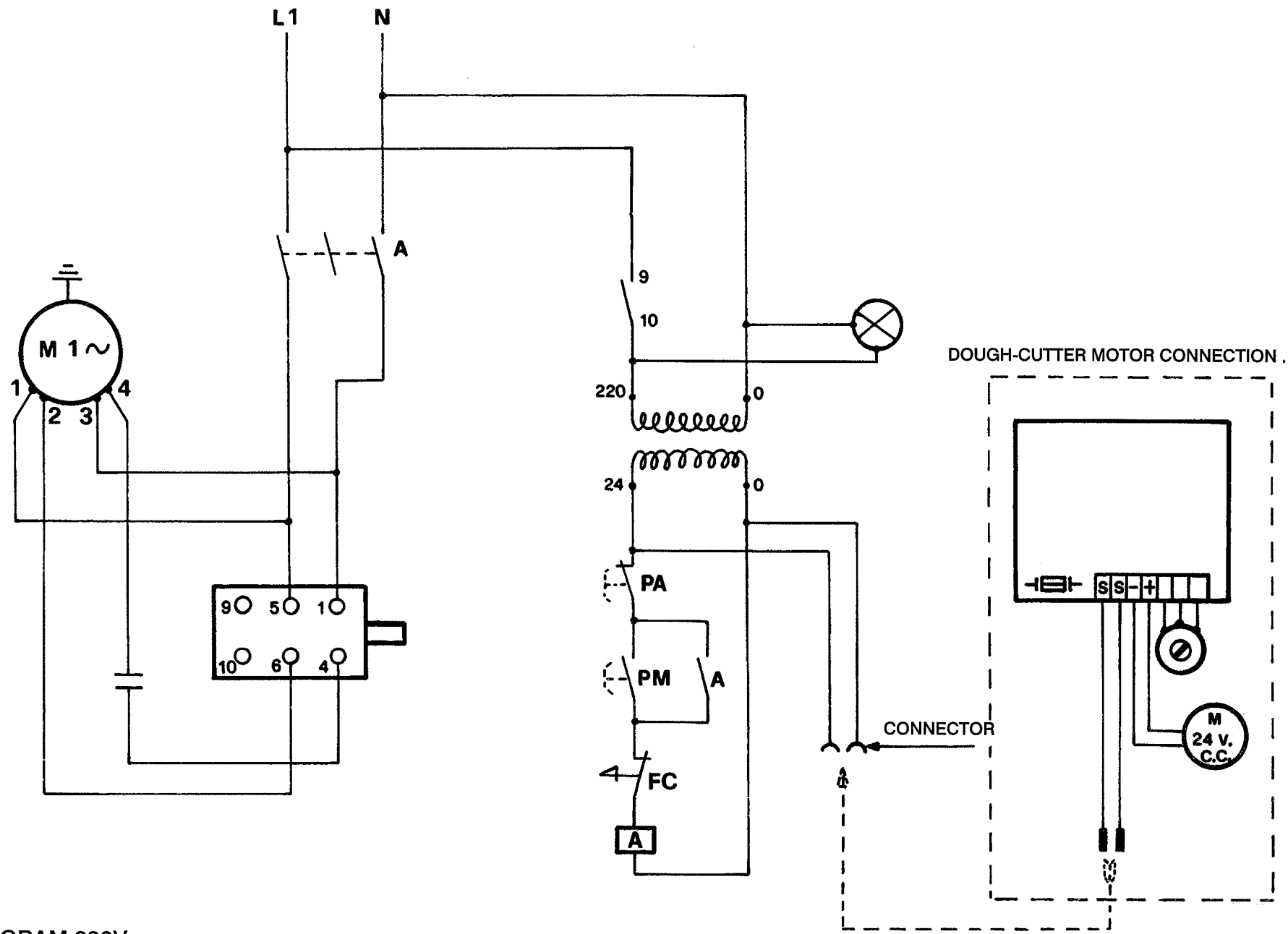

WIRING DIAGRAM 220V

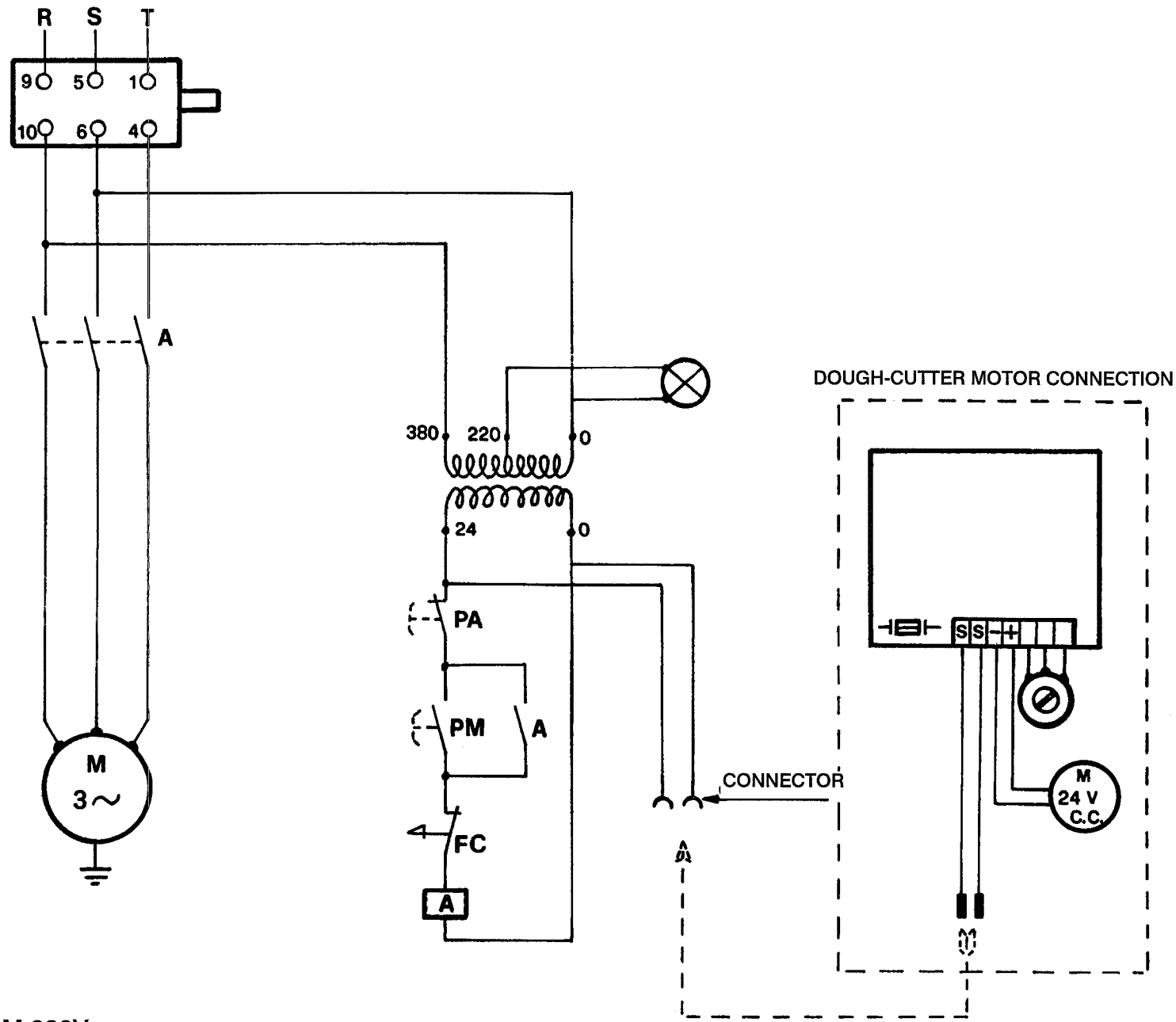

WIRING DIAGRAM 380V

Retailer: